21. November 2019

DALLMER

roof drain type 64 FPO-PP, DN 70

Product No. **641007**
EAN: 4001636641007
Discount group: 10

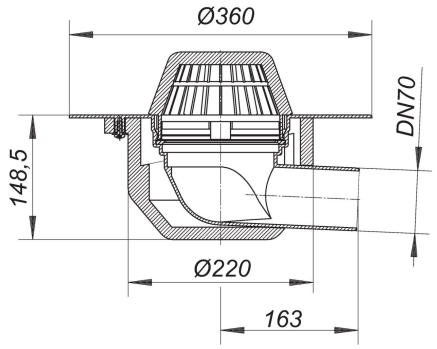

conforming to DIN EN 1253
with extra wide flange for welding FPO-PP membranes directly or fixing PE vapour barriers

specification:
- insulated drain body
- side outlet DN 70 or DN 100, 3 degrees fall
- domed grate

material:
polypropylene, UV-stabilized

DN 70 connects to BS4514 75 mm pipework with 880345 adaptor

Product No.	Description	Dimensions
500328	balcony grating GES 15, 200 x 200 mm	200 x 200 mm
500311	balcony grating SEN 15, 150 x 150 mm	150 x 150 mm
500304	balcony grating SES 15, 150 x 150 mm	150 x 150 mm
620996	domed grating/gravel guard S 15, d: 170 mm	d: 170 mm
620934	domed grating/gravel guard type S 15. stainless steel, d: 150 mm	
590183	flat grate S 15, d: 170 mm	d: 170 mm
671394	overflow adaptor 86.1	
495938	perforated collar, d: 170 mm	d: 170 mm
590121	perforated collar/gravel guard S 15, d: 170 mm	d: 170 mm
620958	planter drain box, 362 x 362 mm	362 x 362 mm

Dallmer GmbH + Co KG · Wiebelsheidestraße 25 · 59757 Arnsberg / Germany · Tel.: +49 2932 9616-0 · Fax: +49 2932 9616-222
www.dallmer.de · info@dallmer.de

Subject to modifications due to technical development, errors and misprints.

21. November 2019

DALLMER

620965	planter raising piece, 362 x 362 mm	362 x 362 mm
621580	raising piece type 630 clamp ring	
622587	raising piece type 630 DallBit	
621573	raising piece type 630 FPO-PE	
671226	raising piece type 630 FPO-PP	
623584	raising piece type 630 PVC	
790224	waterproofing collar type 65, EPDM, 500 x 500 mm	500 x 500 mm
790217	waterproofing collar type 65, PVC, 500 x 500 mm	500 x 500 mm

Dallmer GmbH + Co KG · Wiebelsheidestraße 25 · 59757 Arnsberg / Germany · Tel.: +49 2932 9616-0 · Fax: +49 2932 9616-222
www.dallmer.de · info@dallmer.de

Subject to modifications due to technical development, errors and misprints.